PROCESS SYSTEMS
AIR and FLUID CONTROL

2 WAY SOFT CLOSE SOLENOID VALVE

Normally Closed G1/4" - G2"
Normally Open G1/2" - G2"
Brass Body and Stainless Steel Body

'Econo' **Series**
B35
B36
S35

'Econo' Series

General Description

An economical general purpose industrial solenoid valve with encapsulated coil.
The soft close function helps reduces water hammer and is suitable for non aggressive media up to 40 CST viscosity.
Typical applications include:
Mechancial Services, Fluid Control, Irrigation, Air, Inert Gases and Light Oils.

Technical Specifications

Fluid temperature:	*-10⁰C to 80⁰C*
Materials in contact:	*Body - Brass or Stainless Steel* *Shading Ring: Copper* *Operator: Stainless Steel*
Seat:	*Nitrile NBR*
Backing Washer:	*POM*
Voltage variation:	*+10% -10% AC/DC*
Duty rate:	*100% (class F insulation)*
Power:	*Sizes 1/4" to 1"- 11VA AC, 15W DC* *Sizes 1 1/4" to 2" - 20VA AC, 21W DC (12V)* *17W DC (24V)*
Connector:	*Square Plug*
Protection:	*IP65*
Ambient temp:	*-10⁰C to +45⁰C*

MODEL *'Econo'*	FUNCTION	PORT SIZE-BSP	ORIFICE Ømm	CV	PRESSURE (BAR) AC	PRESSURE (BAR) DC	MEDIA TEMP (Nitrile)	WEIGHT kg
SERVO ASSISTED DIAPHRAGM VALVE - BRASS BODY - NORMALLY CLOSED (N.C)								
B35 - 2-10 - ✻ N	N.C	1/4	10	2.3	0.3-10	0.3-10 #	-10⁰C	0.5
B35 - 3-10 - ✻ N		3/8	10	2.3	0.3-10	0.3-10 #		0.5
B35 - 4-10 - ✻ N		1/2	10	3	0.3-10	0.3-10 #		0.5
B35 - 4-14 - ✻ N		1/2	14	5	0.3-10	0.3-10 #		0.7
B35 - 5-14 - ✻ N		3/4	14	5	0.3-10	0.3-10 #		1.4
B35 - 5-20 - ✻ N		3/4	20	10	0.3-16	0.3-16		1.3
B35 - 6-20 - ✻ N		1	20	11	0.3-16	0.3-16		1.3
B35 - 7-40 - ✻ N		1 1/4	40	28	0.7-16	0.7-16		2.9
B35 - 8-40 - ✻ N		1 1/2	40	34	0.7-16	0.7-16		2.8
B35 - 9-50 - ✻ N	N.C.	2	50	50	0.7-16	0.7-16	80⁰C	4.2
SERVO ASSISTED DIAPHRAGM VALVE - BRASS BODY - NORMALLY OPEN (N.O)								
B36 - 4 - 14 - ✻ N	N.O	1/2	14	5	0.3-10	0.3-10 #	-10⁰C	0.7
B36 - 5 - 20 - ✻ N		3/4	20	10	0.3-16	0.3-16		1.3
B36 - 6 - 20 - ✻ N		1	20	11	0.3-16	0.3-16		1.3
B36 - 7 - 40 - ✻ N		1 1/4	40	28	0.7-16	0.7-16		2.1
B36 - 8 - 40 - ✻ N		1 1/2	40	34	0.7-16	0.7-16		2.8
B36 - 9 - 50 - ✻ N	N.O.	2	50	50	0.7-16	0.7-16	80⁰C	4.2
SERVO ASSISTED DIAPHRAGM VALVE - ST.ST. BODY - NORMALLY CLOSED (N.C)								
S35 - 2-10 - ✻ N	N.C	1/4	10	2.3	0.3-10	0.3-10 #	-10⁰C	0.45
S35 - 3-10 - ✻ N		3/8	10	2.3	0.3-10	0.3-10 #		0.45
S35 - 4-10 - ✻ N		1/2	10	3	0.3-10	0.3-10 #		0.45
S35 - 5-20 - ✻ N		3/4	20	10	0-10	0-10		1.4
S35 - 6-20 - ✻ N	N.C	1	20	11	0-10	0-10	80⁰C	1.3

 # = 12vDC & 24vAC
= 0.3-7 Bar

IMPORTANT - Chemical Resistance:
For specific information on chemical resistance of valve components to various Liquids and Gases, refer to the manufacturer or your distributor.

See overpage for applications warning. It is the responsibility of the user to determine suitability of the seat and body materials to the application.

Valves® Online
www.valvesonline.com.au

Ordering Example: *B35-4-10-IN 1/2"BSP, 2 way N.C., 0.3-10 Bar, 10mm orifice, NBR diaphragm, 240v AC c/w connector plug.*

ECONOMICAL / HIGH FLOW / SOFT CLOSE / SOLENOID VALVE

Dimensions

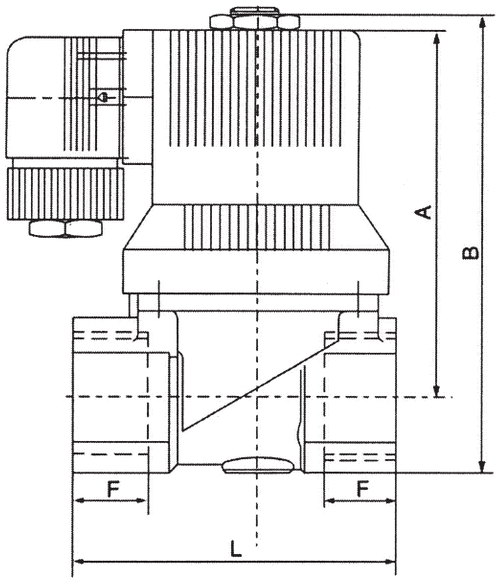

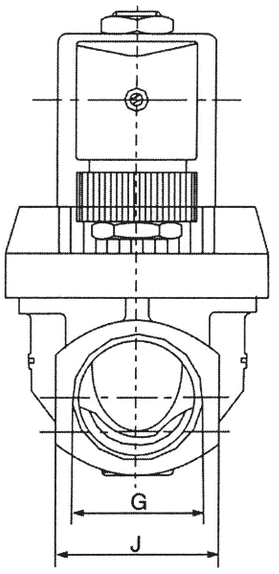

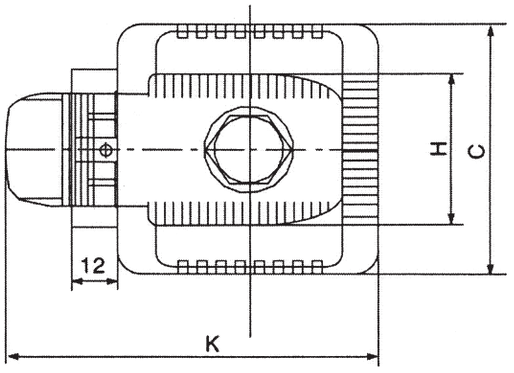

Connector Plug
1 & 2 input terminals
(Non polarity conscious)

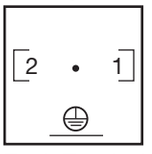

Earth Terminal

MODEL	G	C	F	L	J	A	B	H	K
B35/S35-2-10	G1/4	38	14	50	26	71	85		
B35/S35-3-10	G3/8	38	14	50	26	71	85		
B35/S35-4-10	G1/2	38	14	50	26	71	85		
B35/B36-4-14	G1/2	45	16	58	31	82	96		
B35-5-14	G3/4	45	16	58	31	82	96	35	80
B35/B36/S35-5-20	G3/4	65	18	82	41	96	117		
B35/B36/S35-6-20	G1	65	18	82	41	96	117		
B35/B36-7-40	G11/4	96	20	132	58	112	145		
B35/B36-8-40	G11/2	96	20	132	58	112	145		
B35/B36-9-50	G2	111	22	160	70	125	166		

This data sheet can be downloaded from our website.

PROCESS SYSTEMS PTY LTD
A.B.N. 15 010 932 386

Email: sales@processsystems.com.au
P.O. Box 2070 Wellington Pt. Qld. 4160
Corner Lytton & Ramsay Rd. Hemmant, Brisbane
Queensland 4174 Australia

Website: www.valvesonline.com.au
Int. Fax +61 7 3890 3133
Phone 1300 887 880 (6 lines)
Int. Phone: +61 7 3890 3122

WARNING

These products are intended for use in industrial applications only. Do not use these products where pressures and temperatures can exceed those listed under **'Technical Data'** and in our individual 'Series' data sheets. Before using these products with fluids other than those specified, for non-industrial applications, life-support systems, or other applications not within published specifications, consult **Process Systems Pty Ltd.**

Through misuse, age, or malfunction, components used in industrial valve applications can fail in various modes. The system designer is warned to consider the failure modes of all component parts used in industrial valve applications and to provide adequate safeguards to prevent personal injury or damage to equipment in the event of such failure.

System designers must provide a warning to the user in the system instructional manual if protection against a failure mode cannot be adequately provided.

System designers and end users are cautioned to review specific warnings or specifications found in instruction sheets or labels packed or attached and shipped with the products.

Our policy is one of continuous research and development. We therefore reserve the right to amend without notice the specifications given in this document or our individual 'Series' data sheets.

WARRANTY INFORMATION

Series B35/B36/S35 and all other products manufactured or distributed by Process Systems Pty. Ltd. are warranted by Process Systems to be free of defects in material and workmanship for a period of 1 year from the date of purchase or as the manufacturer warrants. Process Systems obligation under this warranty is limited to repair or replacement of the defective product or refund of the purchase price paid solely at the discretion of Process Systems and provided such defective product is returned to Process Systems freight prepaid and upon examination by Process Systems such product is found defective. This warranty shall be void in the event that the product has been subject to misuse, misapplication, improper maintenance, modification or tampering. This warranty is expressed in lieu of all other warranties, expressed or implied from Process Systems Pty. Ltd. representatives or employees. Process Systems reserves the right to change Valve and Brochure specifications without notice.

01/05